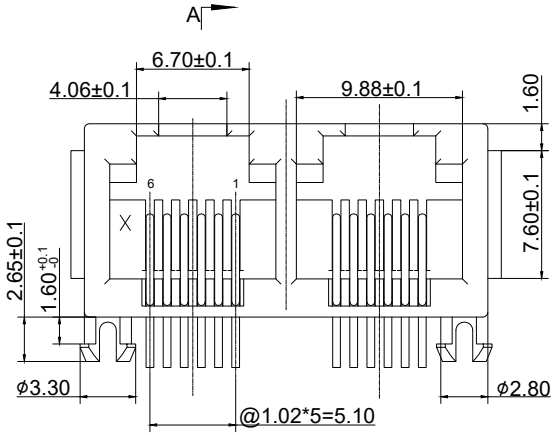

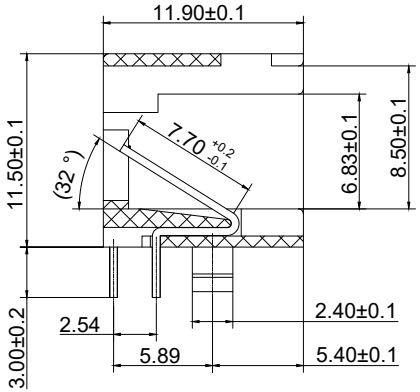

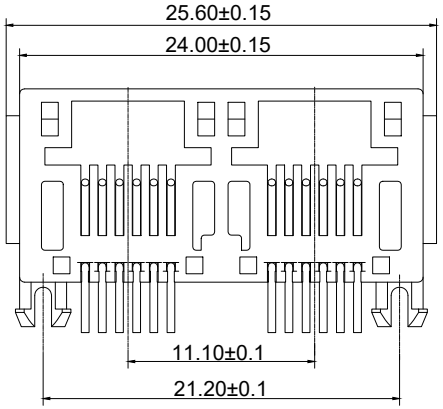

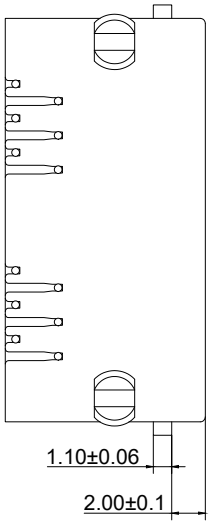

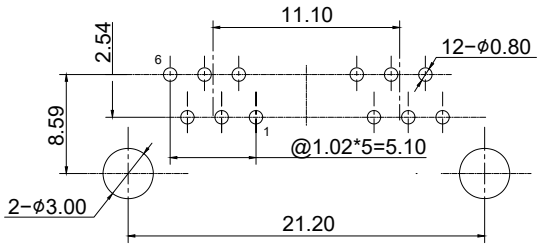

RECOMMENDED PCB LAYOUT

NOTES:

MECHANICAL

HOUSING & INSERT	: THERMOPLASTIC GLASS FIBER FILLED UL 94V-0 BLACK
CONTACT	: PHOSPHOR BRONZE
PLATING	: GOLD PLATING AT CONTACT AREA NICKEL PLATING OVER ALL
DURABILITY	: 750 CYCLES MIN.
MATING/UNMATING FORCE	: 30N / 3.06 KG MAX .
RETENTION STRENGTH	: 30N MIN. FOR 60S±5S

ELECTRICAL

VOLTAGE RATING	: 125 VAC RMS
CURRENT RATING	: 1.5 AMP
CONTACT RESISTANCE	: 20 mΩ MAX.
INSULATION RESISTANCE	: 1000 MΩ MIN. AT 500V DC
DIELECTRIC STRENGTH	: 1000V AC OR 1500V DC RMS AT 0.5mA 50Hz / 60Hz FOR ONE MINUTE

ENVIRONMENTAL

STORAGE	: -40°C ~ +85°C
OPERATION	: -40°C ~ +85°C

ESGT
E.S. GLOBAL TOP

UNIT	mm
REVISION	04
PRODUC	RJ11 1X2 SIDE ENTRY JACK
DWG NO.	EZC0811-26N11-02
PART NO.	
PROJECTION	
SCALE	
SHEET	1 OF 1

TOLERANCES
00~15 ±0.15
15~30 ±0.20
30~ ±0.25
50~ ±0.30
ANGLES ± 1°